♦ USB A Type Right Angle, Through Hole

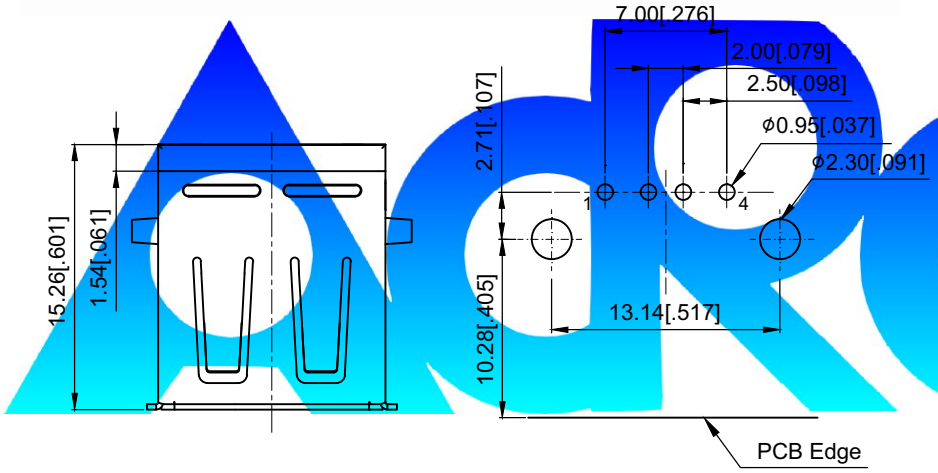

Recommended PCB Layout

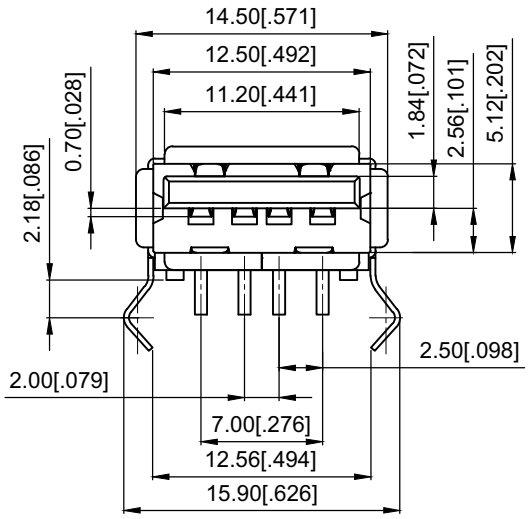

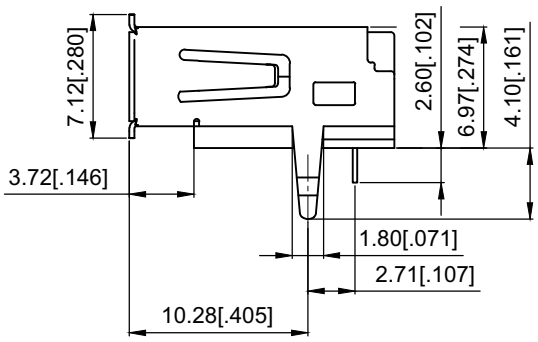

Ordering Information:

USR04 - A3 - R 0 0 0 1
1

1.Plastic Options
0-Black
1-White

Physical:

- ♦ Housing
  Thermoplastic, UL 94V-0 Rated
- ♦ Terminal
  Copper Alloy
- ♦ Shell
  Copper Alloy
- ♦ Terminal Plating
  Gold Plating on Contact Area
  Tin Plating on Solder Tails
  Nickel Underplating Overall
- ♦ Shell Plating
  Tin Plating on Solder Tails
  Nickel Underplating Overall

Mechanical Specifications:

- ♦ Durability
  1500 Cycles
- ♦ Operating Temperature Rating
  -20°C to +60°C

Electrical Specifications:

- ♦ Rated Voltage
  30V DC
- ♦ Rated Current
  1.5A DC
- ♦ Contact Resistance
  30 Milliohms Max. Initial
- ♦ Dielectric Withstanding Voltage
  750V AC Min for 1 Minute
- ♦ Insulation Resistance
  1000 Megohms Min.